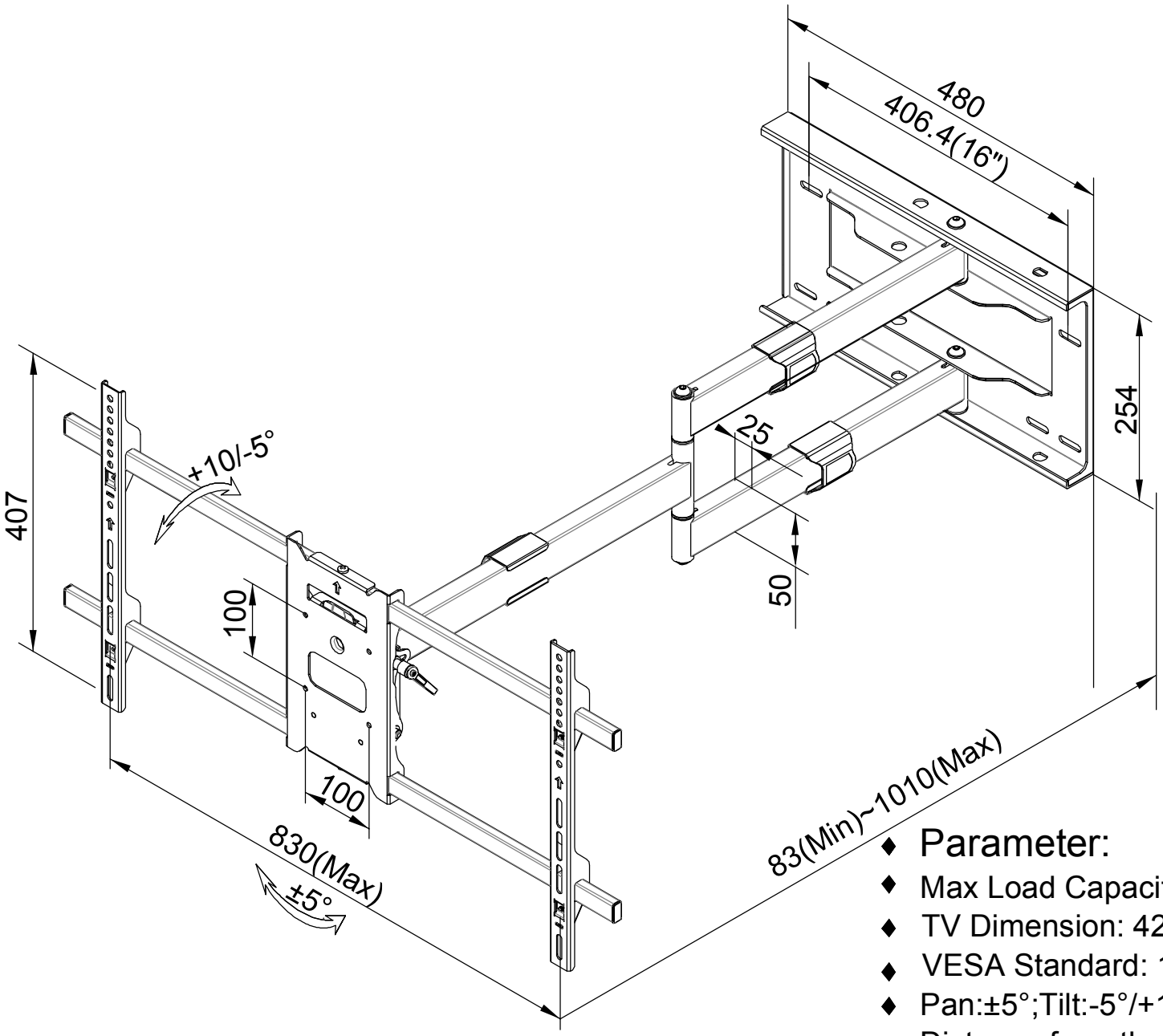

- Parameter:
- Max Load Capacity:110lbs(50kg)
- TV Dimension: 42"-80"
- VESA Standard: 100x100~800x400mm
- Pan:±5°;Tilt:-5°/+10°
- Distance from the wall:83(Min)~1010mm(Max)